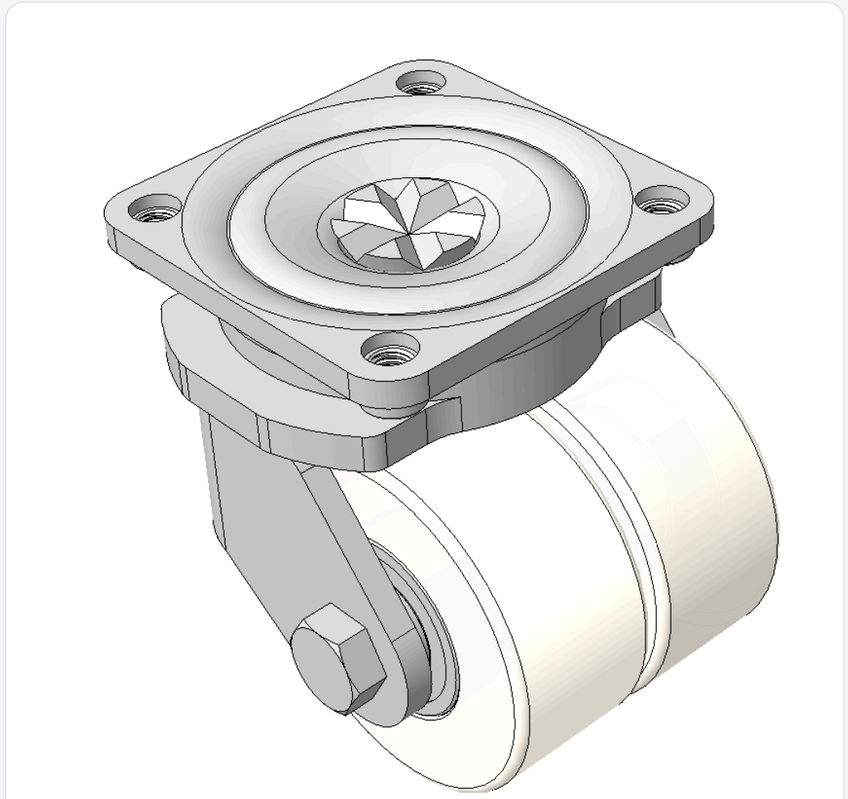

Picture may differ from original product





1165-5 AMR/AGV- 5 Pressed Steel Caster - Single Wheel Series (Medium/Light Duty)

MC Nylon Wheel (Beige) Wheel Diameter×Wheel Width 75×35mm

KS-11650305072013 Copy model no.

Wheel Diameter	Load Capacity (Dynamic)	Overall Height	Wheel Bearing
75mm	800kgs	105mm	Wheels With Ball Bearings

- Swivel Casters, Welded Caster Fork
- Zine-Plated surface, Mounting Type - Top Plate device, 70x70mm Bolt Hole Spacing
- Cast Iron Wheel Center, High Quality Polyurethane Wheel Tread, off-white
- Bearings—Ball Bearings
- Wheel Tread: Hhigh-Quality Polyurethane
- Wheel Center: Iron core/cast iron

Product descriptions are for reference only. The actual product shall prevail.

Product Data Sheet (Metric) | 3D Drawing Request

3D drawings are for members only. Please log in to download.

Product Data Sheet

Metric | Imperial

Wheel Diameter	75mm	Wheel Width	35mm
Wheel Bearing	Wheels With Ball Bearings	Plate Size	90 x 90mm
Bolt Hole Spacing	70 x 70mm	Plate Hole	8mm
Offset	30mm	Swivel Interference	154mm
Overall Height	105mm	Swivel Radius	77mm
Hardness Of Tread	82±5° Shore D	Load Capacity (Dynamic)	800kgs
Load Capacity (Static)	1200kgs	Temperature	-25°C to +80°C
Fork Type	Swivel Caster	Stainless	N/A
Electrical Conductivity	N/A	Anti-Static	N/A 10^6/~10^9/Ω
Weight	2.09kgs	Standard	ISO22883

* For any deviation between metric and imperial spec, please refer to the metric spec.

Performance

Rolling Smoothness
Max. 5 points Score: 5

Quiet Operation
Max. 5 points Score: 2

Floor Surface Preservation
Max. 5 points Score: 2

Applications

Ideal for indoor equipment and carts that are moved often and need quiet rolling and stable positioning.

- **Laboratories & Cleanrooms:** Precision instruments, testing equipment, lab carts and mobile workbenches.
- **Manufacturing & Automated Lines:** Production equipment, fixture carts, inspection machines, material transfer carts and mobile workstations.

Compatible Equipment

Can be fitted to all kinds of equipment and carriers that need to move, turn or be positioned.

- **Tool & Workbench Carts:** Maintenance tool carts, parts carts, assembly carts and mobile workstations.
- **Machinery & Instrument Bases:** Production equipment, machining equipment, testing equipment and laboratory instruments.
- **Material Handling Carts:** Material carts, platform trucks, roll cages, picking carts and transfer carts.

Downloads

PDF **1165-EN-KS2026112001.pdf**
Product Data Sheet (Metric)

3D **1165-CN-KS2026112001-d261120161539.rar**
3D drawings are for members only. Please log in to download.

© 2026 DERSHENG CO., LTD. All rights reserved.