Product Data Sheet

1110-3 Series — Medi Series

TPR wheel (white dark gray) Wheel Diameter x Wheel Width 75 x 12mm

EAN

KS-11100302265023

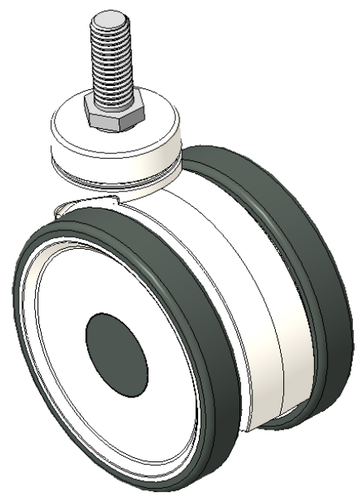

Picture may differ from original product

Swivel double ball Caster, M10x25 thread White Fork with High-quality Impact Resistance Polypropylene reinforcement Rustproof, Corrosion resistant, Attractive appearance, Economical, and Reinforced High-quality Impact Resistance Polypropylene core,High-Quality Thermoplastic Rubber (TPR) tread Dark gray, Anti-thread wheel cover

Wheel tread: Thermoplastic rubber elastomer (TPR)

Wheel Center: Made of high-quality impact-resistant polypropylene

Drawings are for reference only and may differ from the product

Technical Data

◉ Imperial ○ Metric

Wheel Diameter	3 "
Wheel Width	2
Wheel Bearing	Wheel With Plain Bearing
Threaded Stem	M10x25
Threaded Size	1 "
Offset	7/8 "
Swivel Interference	5-1/4 "
Overall Height	4-3/4 "
Swivel Radius	2-5/8 "
Hardness Of Tread	82±5° Shore A
Load Capacity (Dynamic)	66lbs
Load Capacity (Static)	99lbs
Temperature	-4°F to +140°F
Fork Type	Swivel Caster
Stainless	N/A
Electrical Conductivity	N/A
Anti-Static	N/A
Weight	0.4lbs
Standard	ISO22883

Advantages at a glance

Rolling Resistance	● ● ● ● ○
Operating Noise	● ● ● ● ○
Floor Surface Preservation	● ● ● ● ●

Dimensions

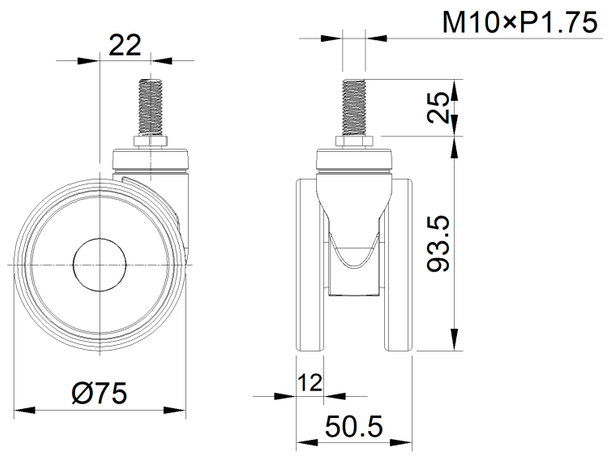

Mounting

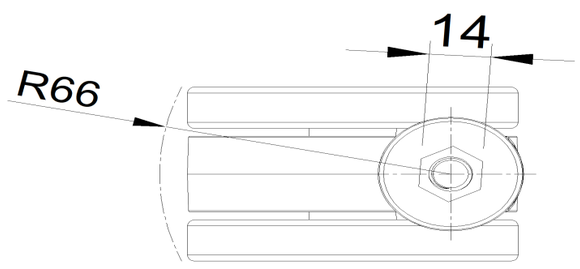

* For any deviation between metric and imperial spec, please refer to the metric spec.

© Copyright 2025 DershengInternational www.dersheng.com