Product Data Sheet

1115-1 Economy -1 Spring Wheel Series

Dersheng Casters Keep Rolling

PU (red round) Wheel Diameter x Wheel Width 150 x 45mm

EAN

KS-11150601331151B

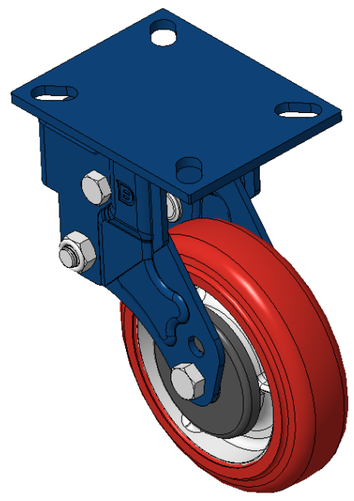

Picture may differ from original product

Rigid, Spring-loaded Caster with Welded Caster Fork and blue paint finish.
Mounting Type - Top Plate, 105x78.5 Bolt Hole Spacing
Cast Iron core with High Quality Polyurethane Wheel Tread
Cast Iron red, Bearing—Ball Bearings

Wheel tread: Made of high-quality polyurethane

Wheel Center: iron core/cast iron core

Drawings are for reference only and may differ from the product

Technical Data

◉ Imperial ○ Metric

Wheel Diameter	150mm
Wheel Width	45mm
Wheel Bearing	Wheels With Ball Bearings
Plate Size	140 x 110mm
Bolt Hole Spacing	105 x 78.5mm
Plate Hole	25 x 13.5mm
Overall Height	220mm
Hardness Of Tread	92±5° Shore A
Load Capacity (Dynamic)	300kgs
Load Capacity (Static)	450kgs
Temperature	-20°C to +70°C
Fork Type	Rigid Caster
Stainless	N/A
Electrical Conductivity	N/A
Anti-Static	N/A
Weight	3.82kgs
Standard	ISO22883

Advantages at a glance

Rolling Resistance	● ● ● ○ ○
Operating Noise	● ● ● ● ○
Floor Surface Preservation	● ● ● ● ○

Dimensions

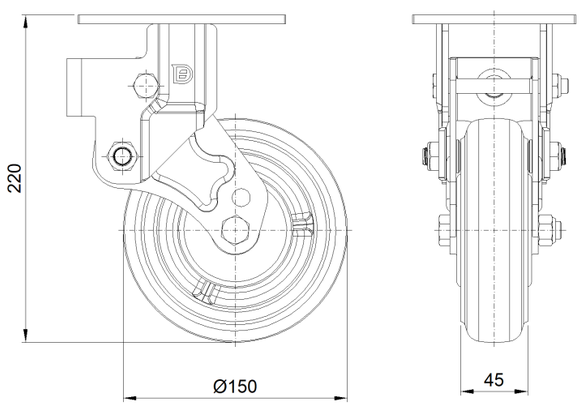

Mounting

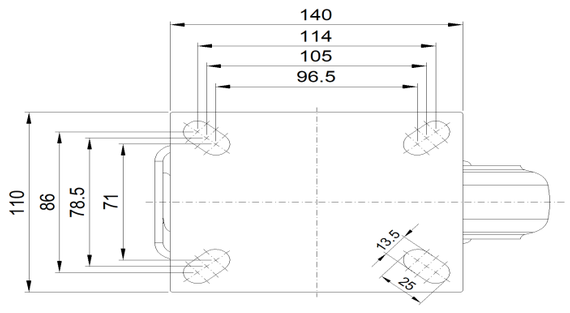

* For any deviation between metric and imperial spec, please refer to the metric spec.

© Copyright 2025 DershengInternational www.dersheng.com