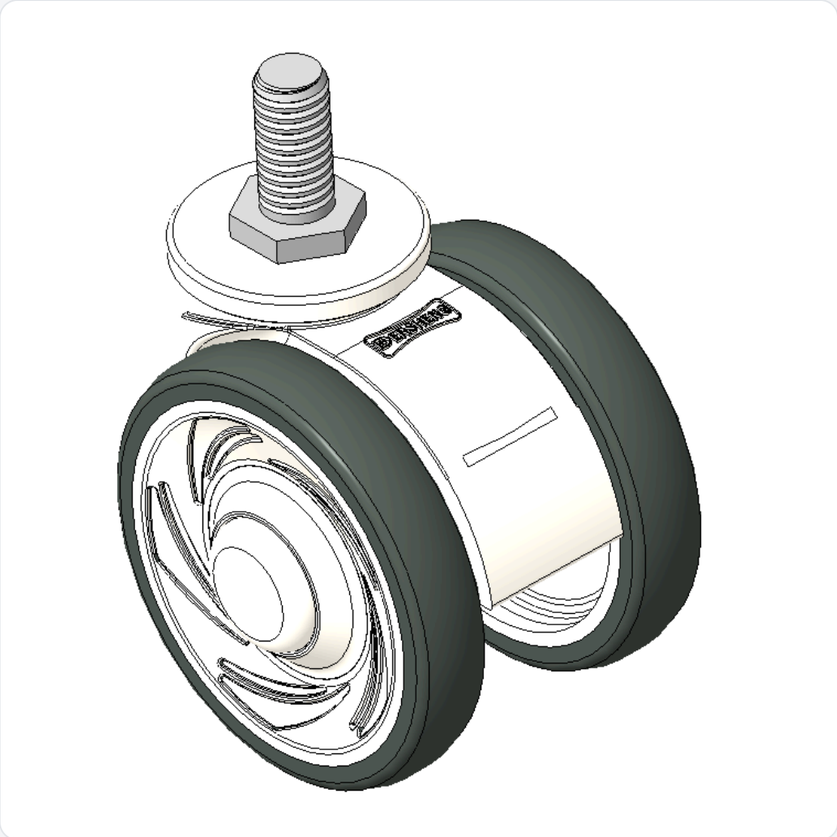

Picture may differ from original product

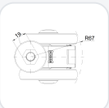

1146 46 Ascendant Series Caster Series(All Plastic)

Double-Ball Full-Effect Wheel (White-Dark Gray) Wheel Diameter × Wheel Width 75 × 14mm

KS-11460300265293 Copy model no.

Wheel Diameter	Load Capacity (Dynamic)	Overall Height	Wheel Bearing
75mm	90kgs	84mm	Wheels With Ball Bearings

Product descriptions are for reference only. The actual product shall prevail.

Product Data Sheet

Wheel Diameter	75mm	Wheel Width	60mm
Wheel Bearing	Wheels With Ball Bearings	Threaded Stem	M12
Threaded Length	25mm	Offset	23mm
Swivel Interference	134mm	Overall Height	84mm
Swivel Radius	67mm	Hardness Of Tread	82±5° Shore A
Load Capacity (Dynamic)	90kgs	Load Capacity (Static)	135kgs
Temperature	-20°C to +60°C	Fork Type	Swivel Caster
Stainless	N/A	Electrical Conductivity	N/A
Anti-Static	N/A	Weight	0.26kgs
Standard	ISO22881		

* For any deviation between metric and imperial spec, please refer to the metric spec.

Performance

Rolling Resistance	●●●●○
Operating Noise	●●●●○
Floor Surface Preservation	●●●●●

© 2026 DERSHENG CO., LTD. All rights reserved.