Product Data Sheet

1146 46 Ascendant Series Caster Series(All Plastic)

Dersheng Casters Keep Rolling

Resolute Rubber wheel (all black) Wheel Diameter x Wheel Width 75 x 14mm

EAN

KS-11460300454143

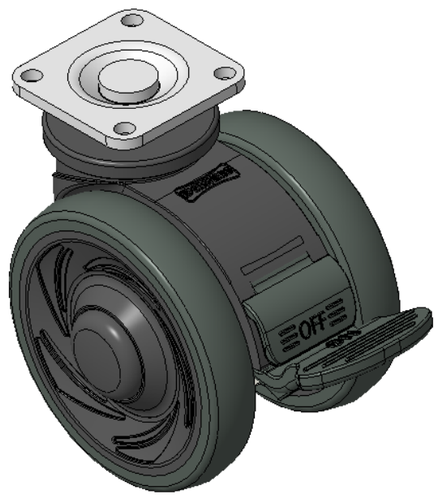

Short Total Brake Casters, 32x32 angled perforated Top Plate
Black Caster Fork made of polypropylene reinforced material
Rust-proof, Corrosion resistant, Attractive appearance, Economical, and allows for smooth rotation
High-Quality Impact-Resistant Polypropylene Wheel Center, High-Quality Reinforced Polypropylene Rubber (TPR) Wheel Tread
Black, Bearing—Ball Bearings

Wheel tread: Thermoplastic rubber elastomer (TPR)

Wheel Center: Made of high-quality impact-resistant polypropylene

Drawings are for reference only and may differ from the product

Picture may differ from original product

Technical Data

◉ Imperial ○ Metric

Wheel Diameter	3 "
Wheel Width	2-7/16 "
Wheel Bearing	Wheels With Ball Bearings
Plate Size	1-11/16 " x 1-11/16 "
Bolt Hole Spacing	1-1/4“x1-1/4”
Plate Hole	1/4 "
Offset	15/16 "
Swivel Interference	7-1/16 "
Overall Height	3-5/8 "
Swivel Radius	3-9/16 "
Hardness Of Tread	72±5° Shore A
Load Capacity (Dynamic)	198lbs
Load Capacity (Static)	298lbs
Temperature	-4°F to +140°F
Fork Type	Swivel Caster With Total Brake
Stainless	N/A
Electrical Conductivity	N/A
Anti-Static	N/A
Weight	0.7lbs
Standard	ISO22881

Advantages at a glance

Rolling Resistance	● ● ● ● ●
Operating Noise	● ● ● ● ●
Floor Surface Preservation	● ● ● ● ●

Dimensions

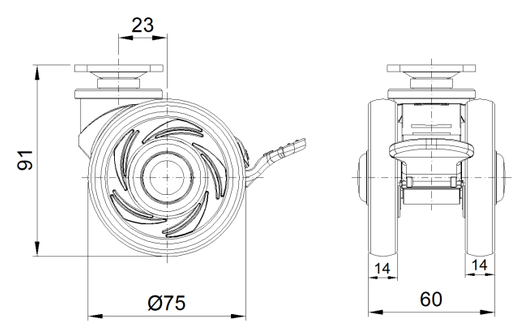

Mounting

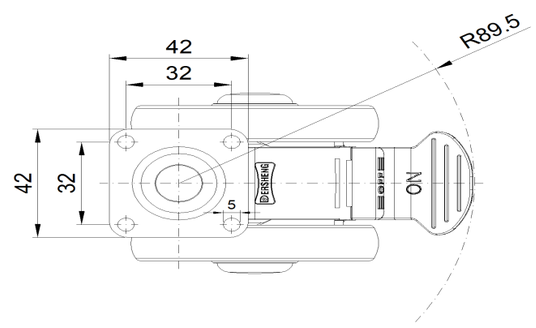

* For any deviation between metric and imperial spec, please refer to the metric spec.

© Copyright 2025 DershengInternational www.dersheng.com