Product Data Sheet

1146 46 Ascendant Series Caster Series(All Plastic)

Dersheng Casters Keep Rolling

Resolute Rubber wheel (white dark gray) Wheel Diameter x Wheel Width 100 x 14mm

EAN

KS-11460491459423A

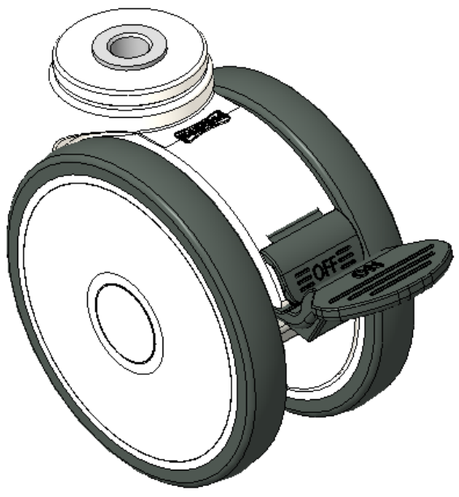

Picture may differ from original product

Long Total Brake Casters, Single Bolthole polyamide legs—hollow Ø10.5
White legs are made of polyamide reinforced material.
Rust-proof, Corrosion resistant, Attractive appearance, Economical, and allows for Smooth rotation.
High-Quality Impact-Resistant Polypropylene Wheel Center, High-Quality Reinforced Polypropylene Rubber (TPR) Wheel Tread.
Dark gray, Bearing—Ball Bearings.

Wheel tread: Thermoplastic rubber elastomer (TPR)

Wheel Center: Made of high-quality impact-resistant polypropylene

Drawings are for reference only and may differ from the product

Technical Data

◉ Metric ○ Imperial

Wheel Diameter	100mm
Wheel Width	60mm
Wheel Bearing	Wheels With Ball Bearings
Single Bolt HoleCentre Hole	10.5mm
Offset	28mm
Swivel Interference	225mm
Overall Height	112mm
Swivel Radius	112.5mm
Hardness Of Tread	72±5° Shore A
Load Capacity (Dynamic)	90kgs
Load Capacity (Static)	135kgs
Temperature	-20°C to +60°C
Fork Type	Swivel Caster With Total Brake
Stainless	N/A
Electrical Conductivity	N/A
Anti-Static	N/A
Weight	0.52kgs
Standard	ISO22881

Advantages at a glance

Rolling Resistance	● ● ● ● ●
Operating Noise	● ● ● ● ●
Floor Surface Preservation	● ● ● ● ●

Dimensions

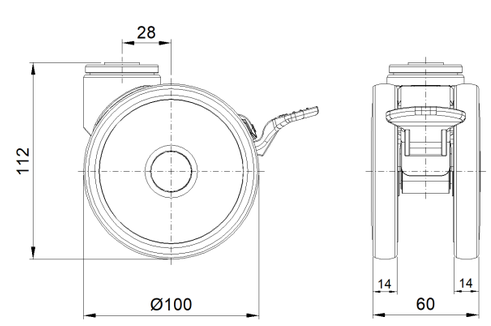

Mounting

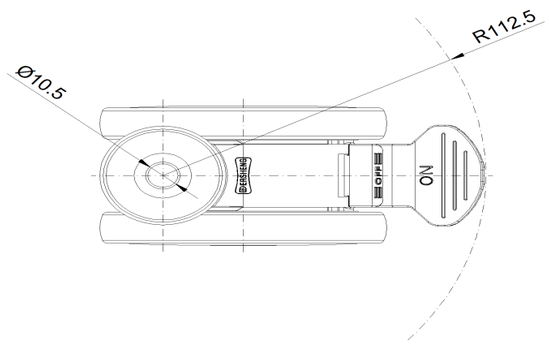

* For any deviation between metric and imperial spec, please refer to the metric spec.

© Copyright 2025 DershengInternational www.dersheng.com