Product Data Sheet

1147 Universal (Single) Spring Wheel Series

NBR (milling black) Wheel Diameter x Wheel Width 150 x 40mm

EAN

KS-11470600044211

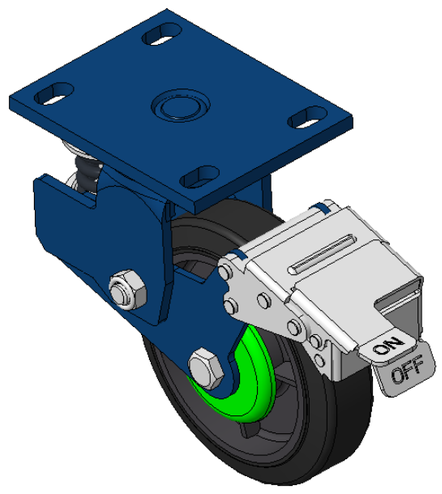

Picture may differ from original product

Spring-loaded Caster with front brake, Welded Caster Fork Blue-painted finish, Mounting Type - Top Plate, 110x75 Bolt Hole Spacing Cast Iron core, High Quality Polyurethane Wheel Tread Cast Iron black, Bearing—Ball Bearings

Wheel tread: Made of high-quality polyurethane

Wheel Center: iron core/cast iron core

Drawings are for reference only and may differ from the product

Technical Data

◉ Imperial ○ Metric

Wheel Diameter	6 "
Wheel Width	1-5/8 "
Wheel Bearing	Wheels With Ball Bearings
Plate Size	5-9/16 " x 4-3/8 "
Bolt Hole Spacing	4-5/16 " x3”
Plate Hole	15/16 " x 9/16 "
Offset	1-15/16 "
Swivel Interference	14-3/4” "
Overall Height	7-15/16 "
Swivel Radius	7-1/2 "
Hardness Of Tread	85±5° Shore A
Load Capacity (Dynamic)	661lbs
Load Capacity (Static)	992lbs
Temperature	-4°F to +176°F
Fork Type	Swivel Caster With Front Brake
Stainless	N/A
Electrical Conductivity	N/A
Anti-Static	N/A
Weight	14.2lbs
Standard	ISO22883

Advantages at a glance

Rolling Resistance	● ● ● ○ ○
Operating Noise	● ● ● ● ○
Floor Surface Preservation	● ● ● ● ○

Dimensions

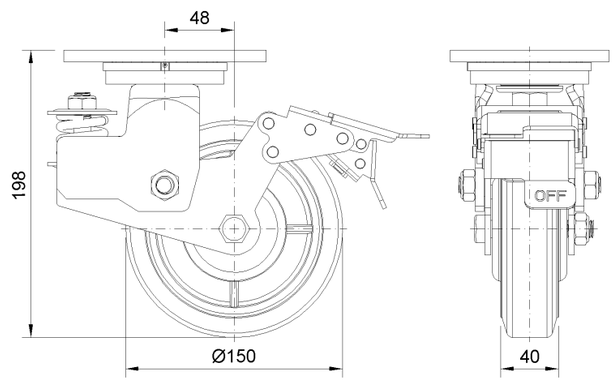

Mounting

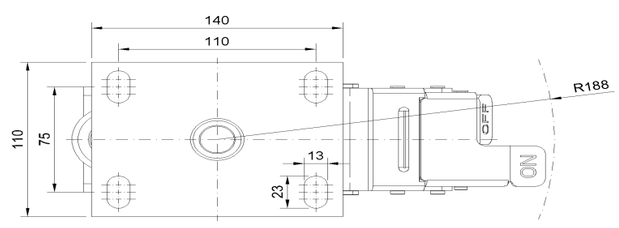

* For any deviation between metric and imperial spec, please refer to the metric spec.

© Copyright 2025 DershengInternational www.dersheng.com