Product Data Sheet

1155-1 Light Plastic-1 Series

Dersheng Casters Keep Rolling

PPR (black and black) Wheel Diameter x Wheel Width 125 x 31mm

EAN

KS-11550591268123

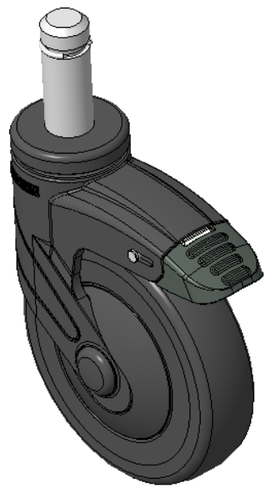

Picture may differ from original product

Total Brake With locking system Caster, Ø21.6x56L, with C-ring
Black Fork made of polyamide reinforced material, plug-in Mounting Type
Rust-proof, Corrosion resistant, Attractive appearance, Economical, and rotates smoothly
High-Quality Impact-Resistant Polypropylene Wheel Center, High-Quality Reinforced Polypropylene Rubber (TPR) Wheel Tread
Black, Bearing—Ball Bearings

Wheel tread: Thermoplastic rubber elastomer (TPR)

Wheel Center: Made of high-quality impact-resistant polypropylene

Drawings are for reference only and may differ from the product

Technical Data

◉ Metric ○ Imperial

Wheel Diameter	125mm
Wheel Width	31mm
Wheel Bearing	Wheels With Ball Bearings
Stem Diameter	21.6mm
Stem Length	56mm
Offset	38mm
Swivel Interference	226mm
Overall Height	163mm
Swivel Radius	113mm
Hardness Of Tread	82±5° Shore A
Load Capacity (Dynamic)	90kgs
Load Capacity (Static)	135kgs
Temperature	-20°C to +60°C
Fork Type	Swivel Caster With Total Brake
Stainless	N/A
Electrical Conductivity	N/A
Anti-Static	N/A
Weight	0.91kgs
Standard	ISO22883

Advantages at a glance

Rolling Resistance	● ● ● ● ○
Operating Noise	● ● ● ● ○
Floor Surface Preservation	● ● ● ● ●

Dimensions

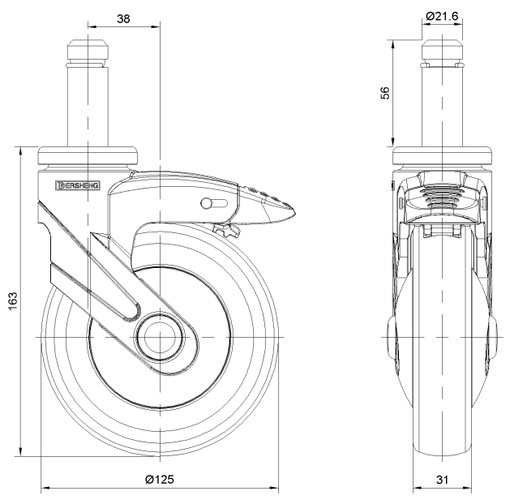

Mounting

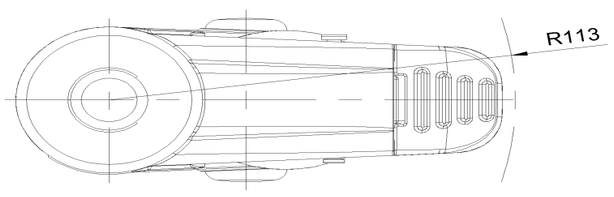

* For any deviation between metric and imperial spec, please refer to the metric spec.

© Copyright 2025 DershengInternational www.dersheng.com