Product Information Sheet

1116-SS-MJ Medium Duty Stainless Steel Caster Series

DERSHENG
Dersheng Casters Keep Rolling

PU (red) Wheel Diameter × Wheel Width 125 x 40mm

EAN

TW-4111605001008

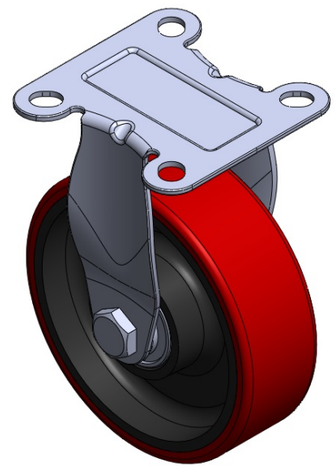

Rigid Casters, Stamping Fabricated Caster Fork; surface vibration, Mounting Type - Top Plate device; cast iron Wheel Center, High Quality Polyurethane Wheel Tread; red, Bearing—Ball Bearings.

Wheel surface: High-quality polyurethane
Wheel Center: Iron core / Cast iron core

Drawings are for reference only and may differ from the product

Picture may differ from original product

Technical Data

◉ Metric ○ Imperial

Wheel Diameter	125mm
Wheel Width	40mm
Wheel Bearing	Wheels With Ball Bearings
Plate Size	95 x 95mm
Bolt Hole Spacing	70 x 70mm
Plate Hole	13.5 x 10.5mm
Overall Height	160mm
Hardness Of Tread	92±5° Shore A
Load Capacity (Dynamic)	130kgs
Load Capacity (Static)	195kgs
Temperature	-20°C to +70°C
Fork Type	Rigid Caster
Stainless	Y
Electrical Conductivity	N/A
Anti-Static	N/A
Weight	1.50kgs
Standard	ISO22883

Advantages at a glance

Rolling Resistance	● ● ● ○ ○
Operating Noise	● ● ● ● ○
Floor Surface Preservation	● ● ● ● ○

Dimensions

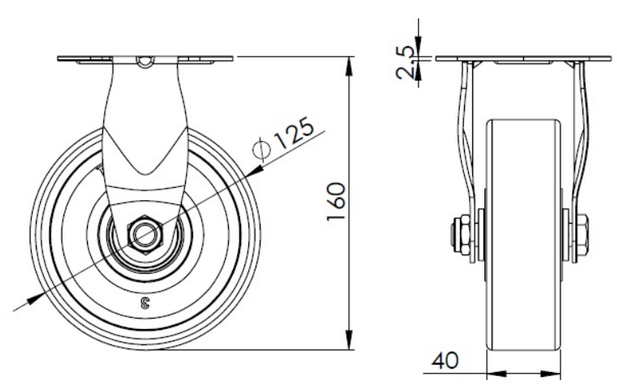

Mounting

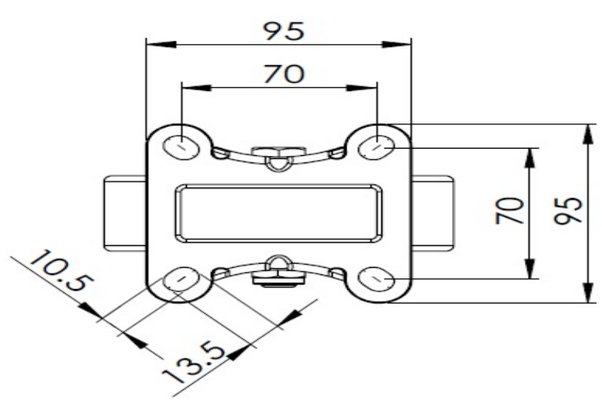

* For any deviation between metric and imperial spec, please refer to the metric spec.

© Copyright 2025 DershengInternational www.dersheng.com