# 1124 1-1/2" Wide General Purposes Caster Series

NBR (milling black) Wheel Diameter x Wheel Width 150 x 40mm

A

YJ-11240600041063

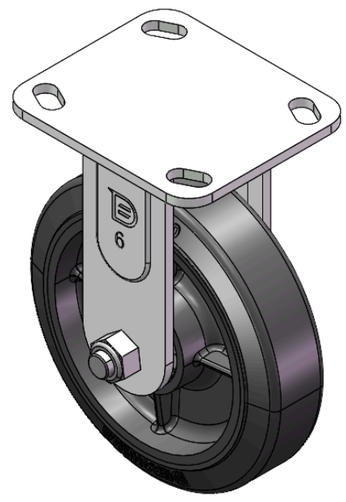

Drawings are for reference only and may differ from the product

Picture may differ from original product

## Technical Data

◉ Imperial ○ Metric

| | |
|---|---|
| Wheel Diameter | 6 " |
| Wheel Width | 1-13/16 " |
| Wheel Bearing | Wheels With Ball Bearings |
| Plate Size | 4-9/16 " x 4 " |
| Bolt Hole Spacing | 3-3/8 " x 2-3/4 " |
| Plate Hole | 13/16 " x 3/8 " |
| Overall Height | 7-1/2 " |
| Hardness Of Tread | 72±5° Shore A |
| Load Capacity (Dynamic) | 551lbs |
| Load Capacity (Static) | 744lbs |
| Temperature | -4°F to +176°F |
| Fork Type | Rigid Caster |
| Stainless | N/A |
| Electrical Conductivity | N/A |
| Anti-Static | N/A |
| Weight | 5.3lbs |
| Standard | ISO22883 |

## Advantages at a glance

| | |
|---|---|
| Rolling Resistance | ● ● ● ○ ○ |
| Operating Noise | ● ● ● ● ○ |
| Floor Surface Preservation | ● ● ● ● ○ |

## Dimensions

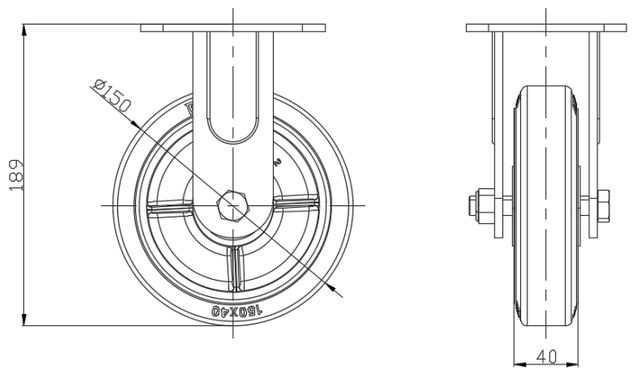


## Mounting

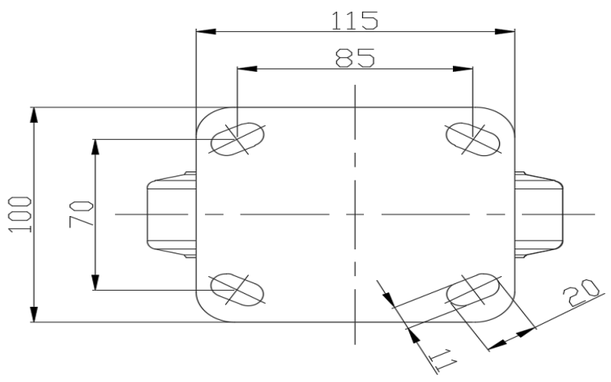


* For any deviation between metric and imperial spec, please refer to the metric spec.

© Copyright 2026 DershengInternational www.dersheng.com