Product Data Sheet

1129 Medical Caster Series

Dersheng Casters Keep Rolling

PPR (Black) Wheel Diameter × Wheel Width 75 x 25mm

EAN

YJ-11290300267083

Swivel Caster, Riveted Stamping Fork - Ø10x30.3L Extended control lever surface, plug-in installation device High-quality Impact Resistance Polypropylene Wheel Center,High-Quality Thermoplastic Rubber (TPR) Wheel Tread Black, wheel - Plain Bearing type.

Wheel tread: Thermoplastic rubber elastomer (TPR)

Wheel Center: Made of high-quality impact-resistant polypropylene

Drawings are for reference only and may differ from the product

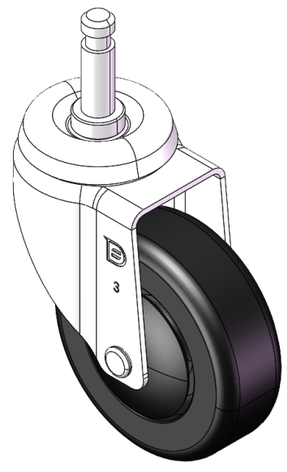

Picture may differ from original product

Technical Data

◉ Imperial ○ Metric

Wheel Diameter	3 "
Wheel Width	1 "
Wheel Bearing	Wheel With Plain Bearing
Diameter	3/8 "
Stem Hole Spec	1-3/8 "
Offset	1-3/16 "
Swivel Interference	5-3/8 "
Overall Height	4-1/8 "
Swivel Radius	2-11/16 "
Hardness Of Tread	82±5° Shore A
Load Capacity (Dynamic)	154lbs
Load Capacity (Static)	231lbs
Temperature	-4°F to +140°F
Fork Type	Swivel Caster
Stainless	N/A
Electrical Conductivity	N/A
Anti-Static	N/A
Weight	0.9lbs
Standard	ISO22883

Advantages at a glance

Rolling Resistance	● ● ● ● ○
Operating Noise	● ● ● ● ○
Floor Surface Preservation	● ● ● ● ●

Dimensions

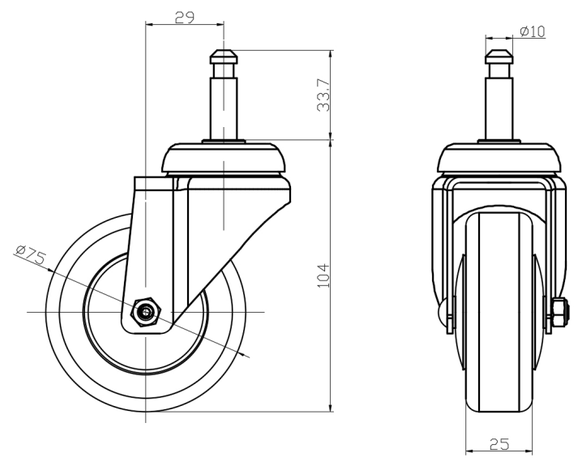

Mounting

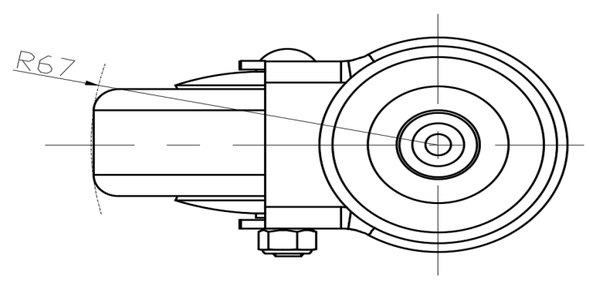

* For any deviation between metric and imperial spec, please refer to the metric spec.

© Copyright 2025 DershengInternational www.dersheng.com