Product Data Sheet

1129 Medical Caster Series

NPPR(grey tire) Wheel Diameter × Wheel Width 100 x 23mm

EAN

YJ-11290400262033

Swivel Caster, Top Plate Riveted Stamping Fork - medical hole Surface Zine-Plated, Mounting Type - Top Plate High-quality Impact Resistance Polypropylene Wheel Center,High-Quality Thermoplastic Rubber (TPR) Wheel Tread Gray green, wheel - Plain Bearing type.

Wheel tread: Thermoplastic rubber elastomer (TPR)

Wheel Center: Made of high-quality impact-resistant polypropylene

Drawings are for reference only and may differ from the product

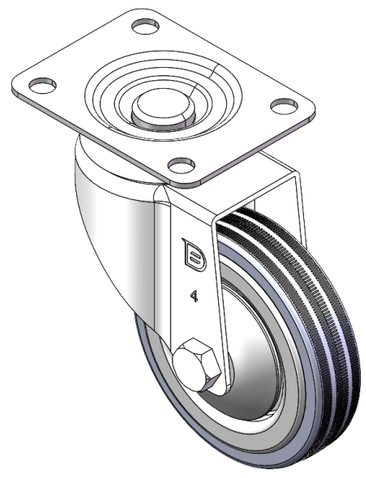

Picture may differ from original product

Technical Data

◉ Metric ○ Imperial

Wheel Diameter	100mm
Wheel Width	23mm
Wheel Bearing	Wheel With Plain Bearing
Plate Size	95 x 72.5mm
Bolt Hole Spacing	72.2 x 53.5mm
Plate Hole	10mm
Offset	43.4mm
Swivel Interference	188mm
Overall Height	137mm
Swivel Radius	94mm
Hardness Of Tread	82±5° Shore A
Load Capacity (Dynamic)	70kgs
Load Capacity (Static)	105kgs
Temperature	-20°C to +60°C
Fork Type	Swivel Caster
Stainless	N/A
Electrical Conductivity	N/A
Anti-Static	N/A
Weight	0.74kgs
Standard	ISO22883

Advantages at a glance

Rolling Resistance	● ● ● ○ ○
Operating Noise	● ● ● ○ ○
Floor Surface Preservation	● ● ● ● ○

Dimensions

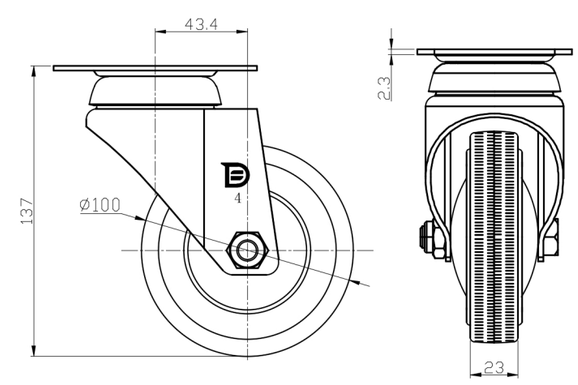

Mounting

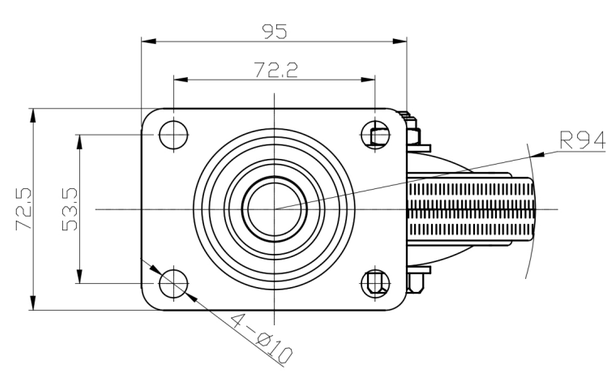

* For any deviation between metric and imperial spec, please refer to the metric spec.

© Copyright 2025 DershengInternational www.dersheng.com