Product Data Sheet

1139 Medium Duty General Purposes Caster Series

WPP (black) Wheel Diameter × Wheel Width 75 x 31mm

EAN

YJ-11390300295033

Swivel Caster, thread Riveted Stamping Fork - M12-P1.75 Extended control lever surface, Threaded Stem installation device Polypropylene Wheel Center, Wheel Tread Black, Bearing - Ball Bearing.

Wheel Tread: PP polypropylene

Wheel Center: PP polypropylene

Drawings are for reference only and may differ from the product

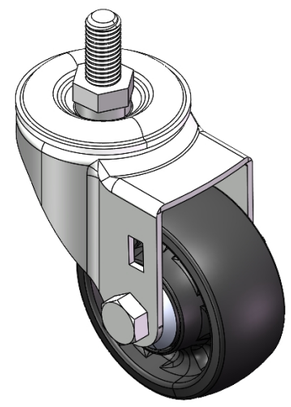

Picture may differ from original product

Technical Data

◉ Metric ○ Imperial

Wheel Diameter	75mm
Wheel Width	31mm
Wheel Bearing	Wheels With Ball Bearings
Threaded Stem	M12-P1.75
Threaded Size	25mm
Offset	38mm
Swivel Interference	152mm
Overall Height	105.5mm
Swivel Radius	76mm
Hardness Of Tread	65±5° Shore D
Load Capacity (Dynamic)	100kgs
Load Capacity (Static)	150kgs
Temperature	-10°C to +60°C
Fork Type	Swivel Caster
Stainless	N/A
Electrical Conductivity	N/A
Anti-Static	N/A
Weight	0.50kgs
Standard	ISO22883

Advantages at a glance

Rolling Resistance	● ● ● ● ●
Operating Noise	● ● ● ○ ○
Floor Surface Preservation	● ● ● ○ ○

Dimensions

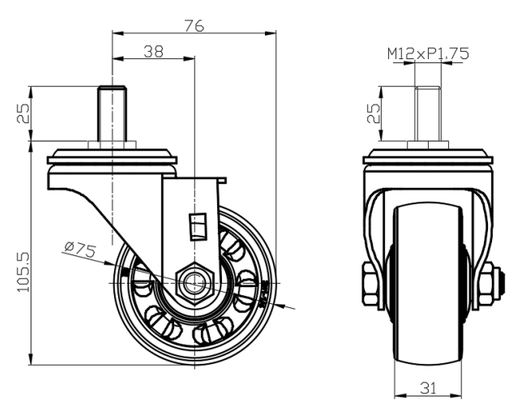

Mounting

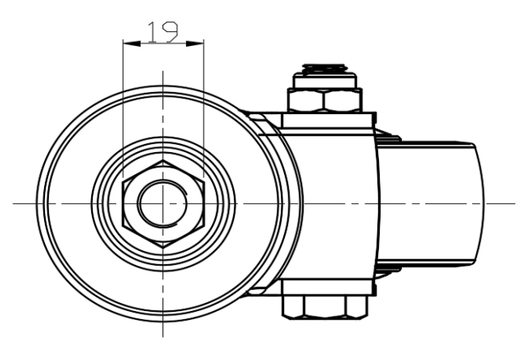

* For any deviation between metric and imperial spec, please refer to the metric spec.

© Copyright 2025 DershengInternational www.dersheng.com