Product Data Sheet

1139 Medium Duty General Purposes Caster Series

Dersheng Casters Keep Rolling

WPP (black) Wheel Diameter × Wheel Width 75 x 31mm

EAN

YJ-11390300295033

Swivel Caster, thread Riveted Stamping Fork - M12-P1.75 Extended control lever surface, Threaded Stem installation device Polypropylene Wheel Center, Wheel Tread Black, Bearing - Ball Bearing.

Wheel Tread: PP polypropylene

Wheel Center: PP polypropylene

Drawings are for reference only and may differ from the product

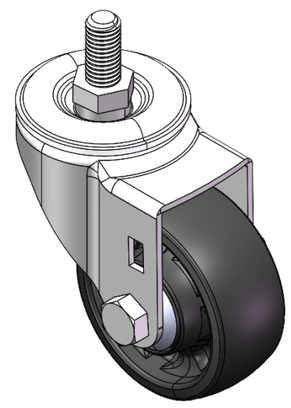

Picture may differ from original product

Technical Data

◉ Imperial ○ Metric

Wheel Diameter	3 "
Wheel Width	1-1/4 "
Wheel Bearing	Wheels With Ball Bearings
Threaded Stem	M12-P1.75
Threaded Size	1 "
Offset	1-1/2 "
Swivel Interference	6 "
Overall Height	4-3/16 "
Swivel Radius	3 "
Hardness Of Tread	65±5° Shore D
Load Capacity (Dynamic)	220lbs
Load Capacity (Static)	331lbs
Temperature	14°F to +140°F
Fork Type	Swivel Caster
Stainless	N/A
Electrical Conductivity	N/A
Anti-Static	N/A
Weight	1.1lbs
Standard	ISO22883

Advantages at a glance

Rolling Resistance	● ● ● ● ●
Operating Noise	● ● ● ○ ○
Floor Surface Preservation	● ● ● ○ ○

Dimensions

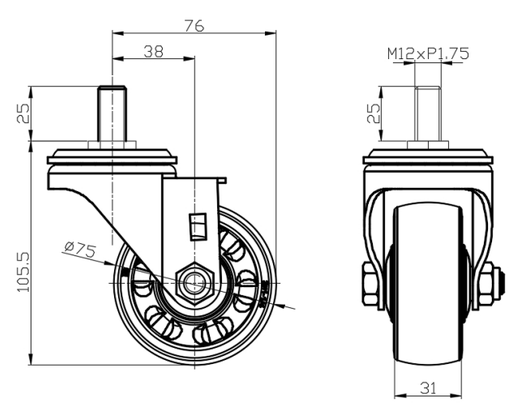

Mounting

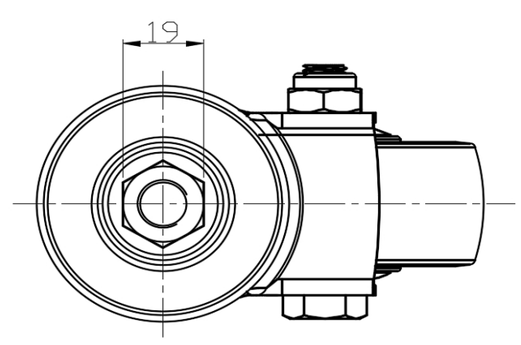

* For any deviation between metric and imperial spec, please refer to the metric spec.

© Copyright 2025 DershengInternational www.dersheng.com