Product Data Sheet

1139 Medium Duty General Purposes Caster Series

DERSHENG
Dersheng Casters Keep Rolling

AQPU (brown round) Wheel Diameter × Wheel Width 75 x 30mm

EAN

YJ-11390300606053

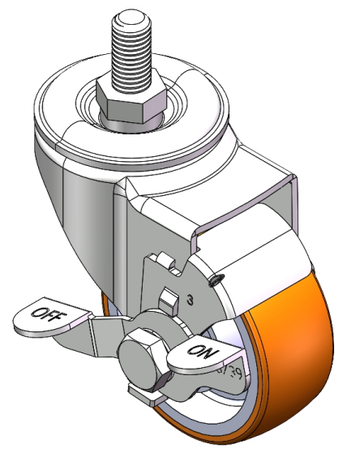

Picture may differ from original product

Casters with Side Brakes and With locking system. Threaded Stem Riveted Pressed Fork – M12-P1.75
Zine-Plated, Mounting Type - Threaded Stem
Aluminum core, High Quality Polyurethane Wheel Tread
Brown, Bearing – Ball Bearings.

Wheel tread: Made of high-quality polyurethane
Wheel Center: aluminum core

Drawings are for reference only and may differ from the product

Technical Data

◉ Imperial ○ Metric

Wheel Diameter	3 "
Wheel Width	1-3/16 "
Wheel Bearing	Wheels With Ball Bearings
Threaded Stem	M12-P1.75
Threaded Size	1 "
Offset	1-1/2 "
Swivel Interference	6-3/8 "
Overall Height	4-3/16 "
Swivel Radius	3-3/16 "
Hardness Of Tread	92±5° Shore A
Load Capacity (Dynamic)	353lbs
Load Capacity (Static)	529lbs
Temperature	-4°F to +158°F
Fork Type	Swivel Caster With Side Brake
Stainless	N/A
Electrical Conductivity	N/A
Anti-Static	N/A
Weight	1.5lbs
Standard	ISO22883

Advantages at a glance

Rolling Resistance	● ● ● ● ●
Operating Noise	● ● ● ● ●
Floor Surface Preservation	● ● ● ● ●

Dimensions

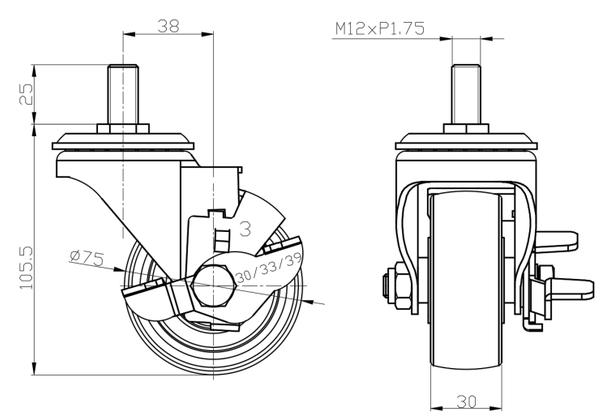

Mounting

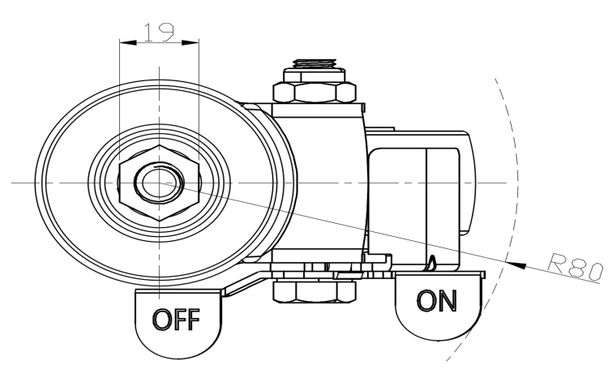

* For any deviation between metric and imperial spec, please refer to the metric spec.

© Copyright 2025 DershengInternational www.dersheng.com