Product Data Sheet

1139 Medium Duty General Purposes Caster Series

W Resolute(Pearlescent dark gray) Wheel Diameter × Wheel Width 100 x 31mm

EAN

YJ-11390400455113

Swivel Caster, thread-Riveted Stamping Fork—M12-P1.75 Extended control lever surface, Mounting Type - Threaded Stem Reinforced impact-resistant High-quality Impact Resistance Polypropylene Wheel Center,High-Quality Thermoplastic Rubber (TPR) Wheel Tread Pearl-colored dark gray, Bearing—Ball Bearing.

Wheel tread: Thermoplastic rubber elastomer (TPR)

Wheel Center: Made of high-quality impact-resistant polypropylene

Drawings are for reference only and may differ from the product

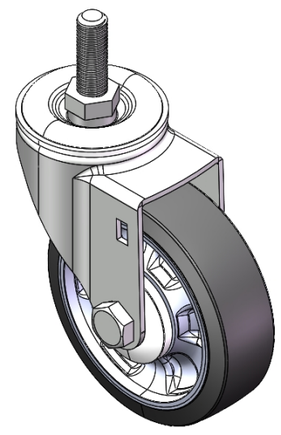

Picture may differ from original product

Technical Data

◉ Imperial ○ Metric

Wheel Diameter	4 "
Wheel Width	1-1/4 "
Wheel Bearing	Wheels With Ball Bearings
Threaded Stem	M12-P1.75
Threaded Size	1-3/8 "
Offset	1-1/2 "
Swivel Interference	7 "
Overall Height	5-3/16 "
Swivel Radius	3-1/2 "
Hardness Of Tread	72±5° Shore A
Load Capacity (Dynamic)	220lbs
Load Capacity (Static)	331lbs
Temperature	-4°F to +140°F
Fork Type	Swivel Caster
Stainless	N/A
Electrical Conductivity	N/A
Anti-Static	N/A
Weight	1.4lbs
Standard	ISO22883

Advantages at a glance

Rolling Resistance	● ● ● ● ●
Operating Noise	● ● ● ● ●
Floor Surface Preservation	● ● ● ● ●

Dimensions

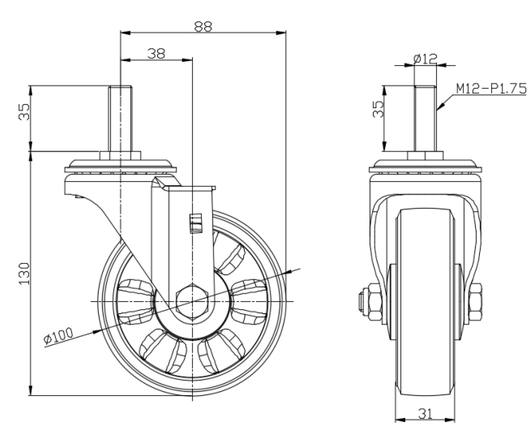

Mounting

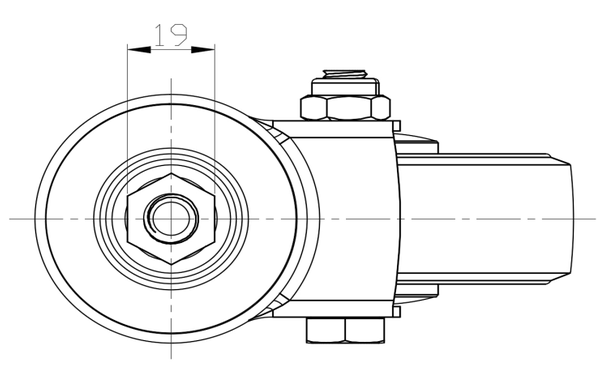

* For any deviation between metric and imperial spec, please refer to the metric spec.

© Copyright 2025 DershengInternational www.dersheng.com