Product Data Sheet

1168 Levelling Caster Series

DERSHENG
Dersheng Casters Keep Rolling

ZQPU (Milled Blue) Wheel Diameter × Wheel Width 62.5× 20（41.5） mm

EAN

YJ-11680250802043

Height Adjustable Leveling Caster. Top Plate Riveted and Stamping with 85 x 70mm (3-3/8" x 2-3/4") Bolt Hole Spacing, Short Pedal. Zine-Plated, Top Plate (4T) Mounting Type mechanism with Height Adjustable Stand. Cast Iron Wheel Center with High Quality Polyurethane tread. Blue color, Bearing—Ball Bearing.

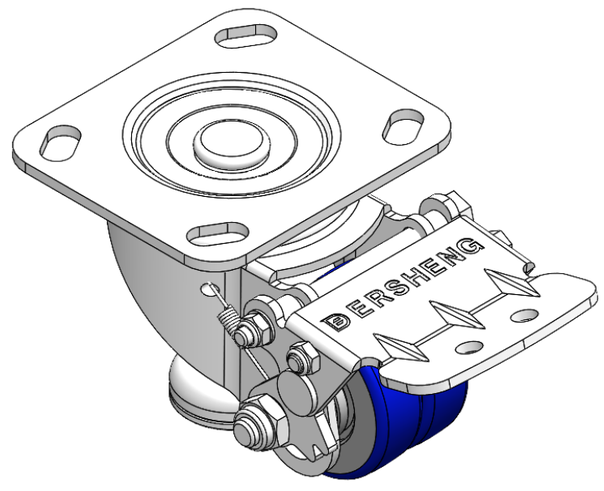

Picture may differ from original product

Wheel Tread: high quality polyurethane
Wheel Center: cast iron core

Drawings are for reference only and may differ from the product

Technical Data

◉ Metric ○ Imperial

Wheel Diameter	62.5mm
Wheel Width	41.5mm
Wheel Bearing	Wheels With Ball Bearings
Plate Size	115 x 100mm
Bolt Hole Spacing	85 x 70mm
Plate Hole	20 x 11mm
Offset	57mm
Swivel Interference	270mm
Overall Height	102mm
Swivel Radius	135mm
Hardness Of Tread	87±5° Shore A
Load Capacity (Dynamic)	200kgs
Load Capacity (Static)	1000kgs
Temperature	-20°C to +70°C
Fork Type	Swivel Caster
Stainless	N/A
Electrical Conductivity	N/A
Anti-Static	N/A
Weight	2.1kgs
Standard	ISO22883

Advantages at a glance

Rolling Resistance	● ● ● ● ●
Operating Noise	● ● ● ● ●
Floor Surface Preservation	● ● ● ● ●

Dimensions

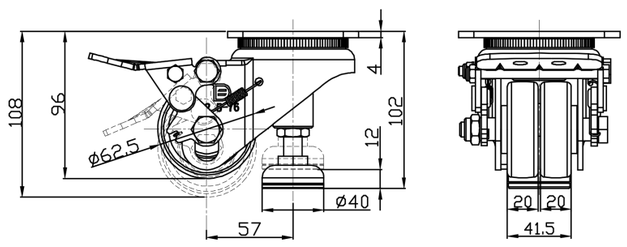

Mounting

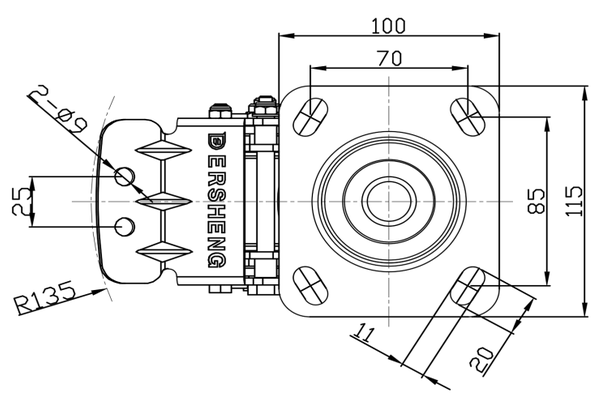

* For any deviation between metric and imperial spec, please refer to the metric spec.

© Copyright 2025 DershengInternational www.dersheng.com