Product Information Sheet

1110-2 Light Duty Wire & Shelving/Display Series

Dersheng Casters Keep Rolling

Wheel diameter × Wheel width 75×21 mm

EAN

YJ-W11100300297413

Swivel Casters, mortise-and-tenon Stamping Fork—Ø11x50L
Zine-Plated surface, mortise-and-tenon Mounting Type device, with brass buckles
Polypropylene Wheel Center and Wheel Tread
Black, Plain Bearings.

Wheel surface: PP polypropylene
Wheel Center: PP polypropylene

Drawings are for reference only and may differ from the product

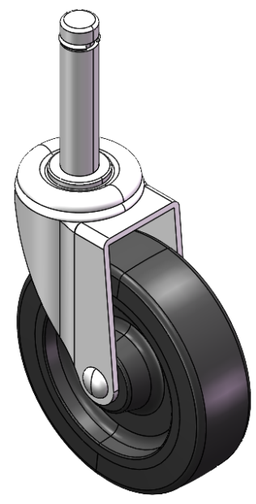

Picture may differ from original product

Technical Data

◉ Metric ○ Imperial

Wheel Diameter	75mm
Wheel Width	21mm
Wheel Bearing	Wheel With Plain Bearing
Stem Diameter	11mm
Stem Length	50mm
Offset	21mm
Swivel Interference	118mm
Overall Height	94mm
Swivel Radius	59mm
Hardness Of Tread	65±5° Shore D
Load Capacity (Dynamic)	40kgs
Load Capacity (Static)	60kgs
Temperature	-10°C to +60°C
Fork Type	Swivel Caster
Stainless	N/A
Electrical Conductivity	N/A
Anti-Static	N/A
Weight	0.23kgs
Standard	ISO22883

Advantages at a glance

Rolling Resistance	● ● ● ● ●
Operating Noise	● ● ● ○ ○
Floor Surface Preservation	● ● ● ○ ○

Dimensions

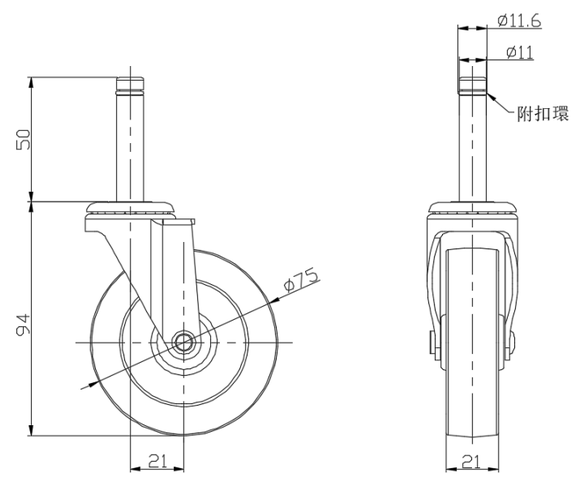

Mounting

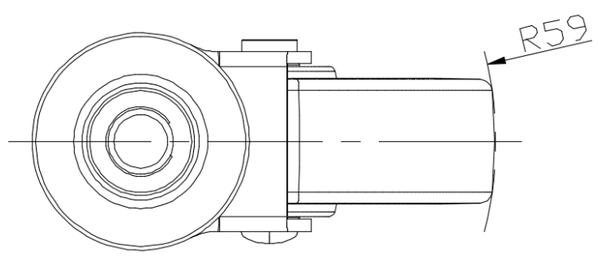

* For any deviation between metric and imperial spec, please refer to the metric spec.

© Copyright 2026 DershengInternational www.dersheng.com